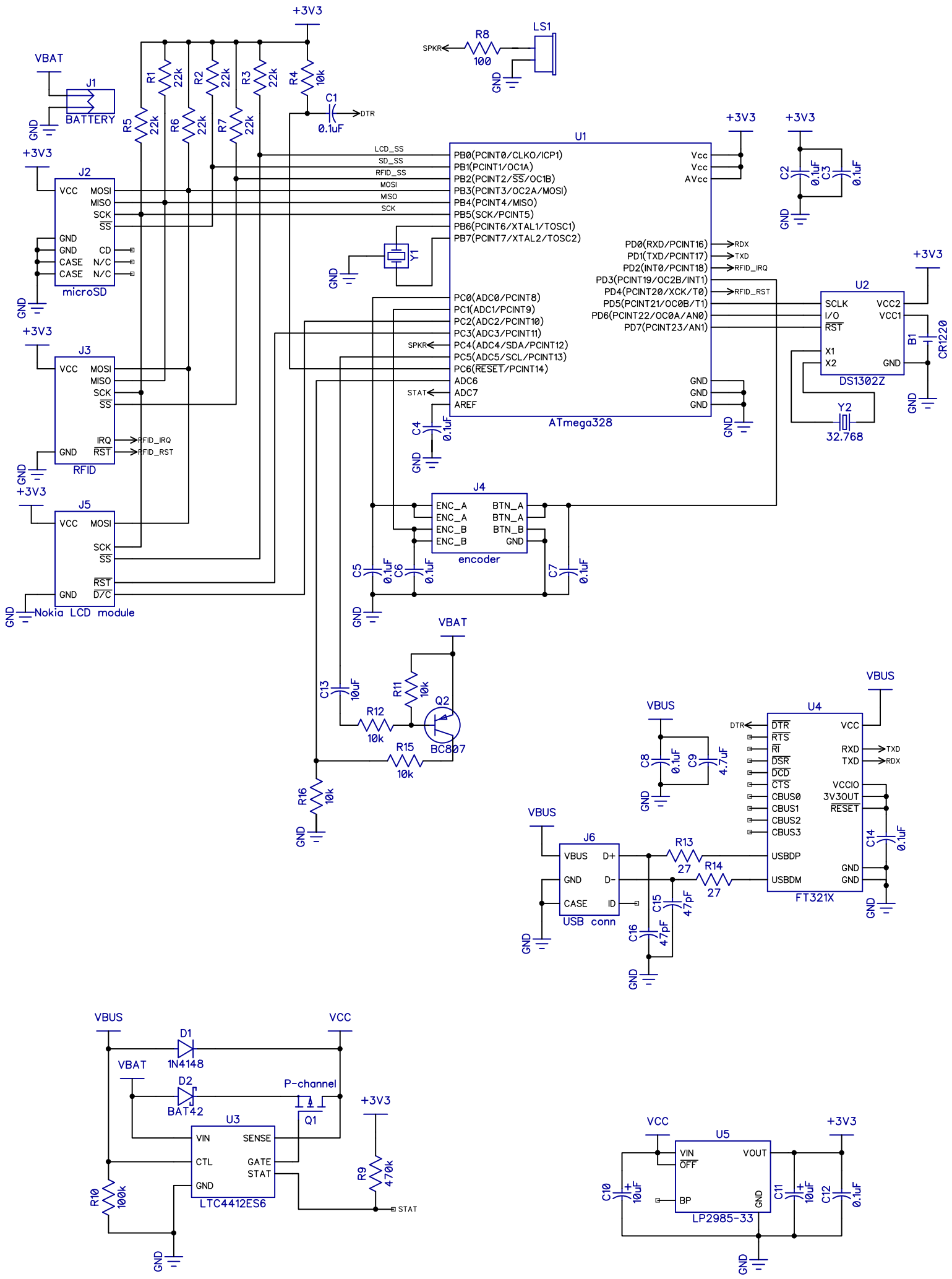
+3V3
VBAT
J1
BATTERY
GND
R1 22k
R2 22k
R3 22k
R4 10k
R5 22k
R6 22k
R7 22k
C1 0.1uF
DTR
R8 100
SPKR
LS1
U1
ATmega328
PB0(PCINT0/CLKO/ICP1)
PB1(PCINT1/OC1A)
PB2(PCINT2/SS/OC1B)
PB3(PCINT3/OC2A/MOSI)
PB4(PCINT4/MISO)
PB5(SCK/PCINT5)
PB6(PCINT6/XTAL1/TOSC1)
PB7(PCINT7/XTAL2/TOSC2)
PC0(ADC0/PCINT8)
PC1(ADC1/PCINT9)
PC2(ADC2/PCINT10)
PC3(ADC3/PCINT11)
PC4(ADC4/SDA/PCINT12)
PC5(ADC5/SCL/PCINT13)
PC6(RESET/PCINT14)
ADC6
ADC7
AREF
Vcc
Vcc
AVcc
PD0(RXD/PCINT16)
PD1(TXD/PCINT17)
PD2(INT0/PCINT18)
PD3(PCINT19/OC2B/INT1)
PD4(PCINT20/XCK/T0)
PD5(PCINT21/OC0B/T1)
PD6(PCINT22/OC0A/AN0)
PD7(PCINT23/AN1)
GND
GND
GND
LCD_SS
SD_SS
RFID_SS
MOSI
MISO
SCK
RDX
TXD
RFID_IRQ
RFID_RST
STAT
Y1
C4 0.1uF
C2 0.1uF
C3 0.1uF
J2
microSD
VCC
MOSI
MISO
SCK
SS
GND
GND
CD
CASE
N/C
CASE
N/C
J3
RFID
VCC
MOSI
MISO
SCK
SS
IRQ
GND
RST
RFID_IRQ
RFID_RST
J5
Nokia LCD module
VCC
MOSI
SCK
SS
RST
GND
D/C
U2
DS1302Z
SCLK
I/O
RST
X1
X2
VCC2
VCC1
GND
B1 CR1220
Y2 32.768
J4
encoder
ENC_A
ENC_A
ENC_B
ENC_B
BTN_A
BTN_A
BTN_B
GND
C5 0.1uF
C6 0.1uF
C7 0.1uF
C13 10uF
R11 10k
R12 10k
R15 10k
R16 10k
Q2 BC807
U4
FT321X
DTR
RTS
RI
DSR
DCD
CTS
CBUS0
CBUS1
CBUS2
CBUS3
USBDP
USBDM
VCC
RXD
TXD
VCCIO
3V3OUT
RESET
GND
GND
VBUS
C8 0.1uF
C9 4.7uF
C14 0.1uF
J6
USB conn
VBUS
GND
CASE
D+
D-
ID
R13 27
R14 27
C15 47pF
C16 47pF
D1 1N4148
D2 BAT42
P-channel
Q1
U3
LTC4412ES6
VIN
CTL
GND
SENSE
GATE
STAT
VCC
R10 100k
R9 470k
STAT
U5
LP2985-33
VIN
OFF
BP
VOUT
GND
C10 10uF
C11 10uF
C12 0.1uF